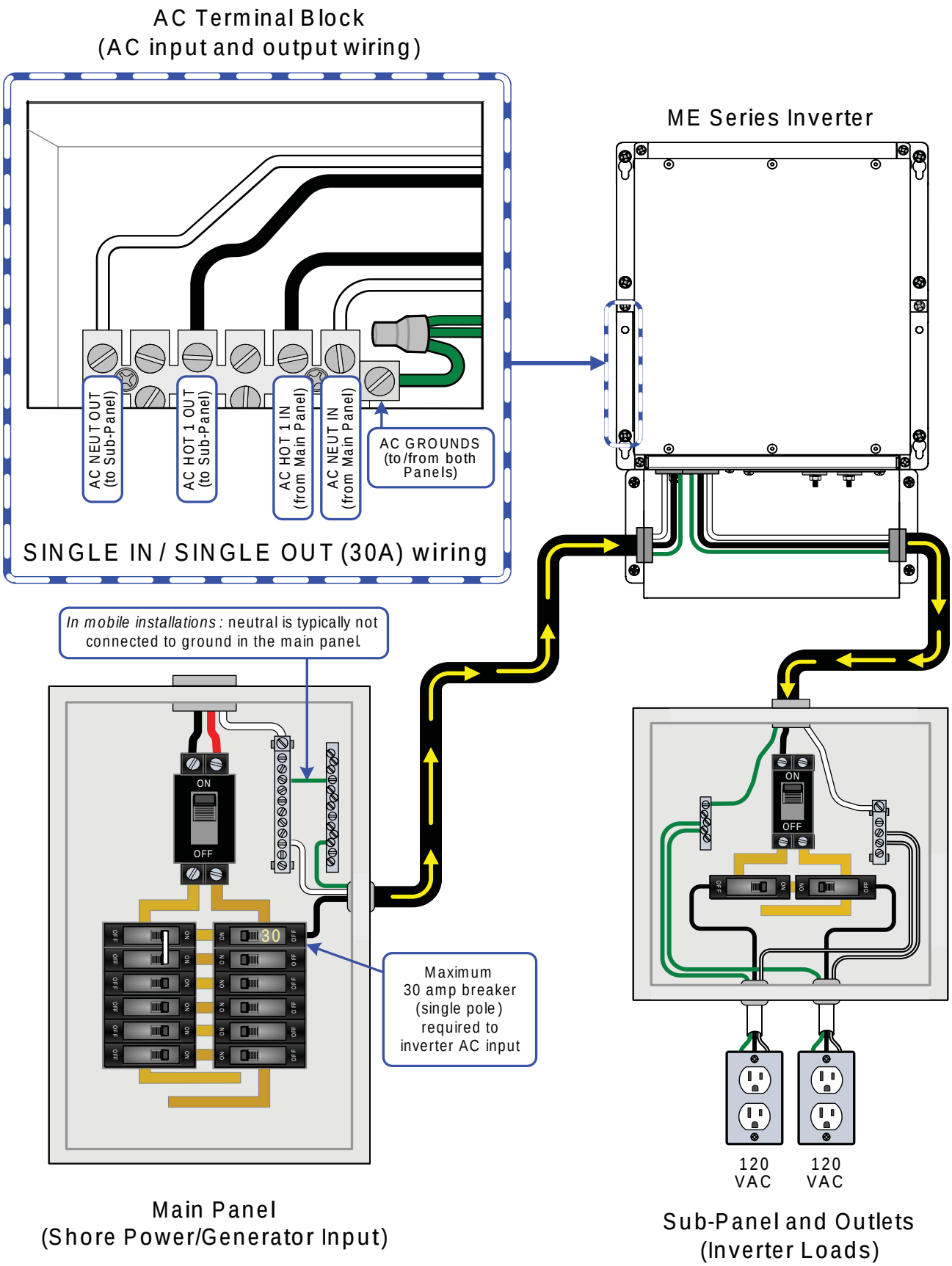

Figure 2-11, AC Wiring for Single In - Single Out (30A) Configurations